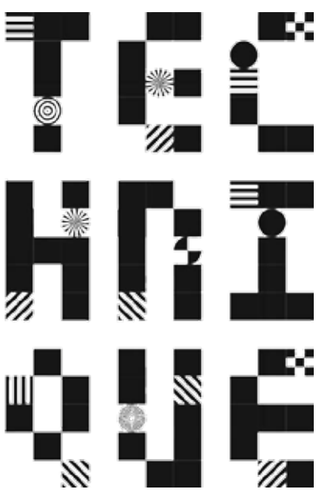

BuckleyGrayYeoman

OVERVIEW DOCUMENT | **23 OCTOBER 2018**

BuckleyGrayYeoman

OVERVIEW DOCUMENT | **23 OCTOBER 2018**

FOREWORD

*This document provides an overview of our proposals for the refurbishment of 132-140 Goswell Road - **Technique.***

Our vision is to transform the building into a flexible, social workspace of the type suited to creative, entrepreneurial companies.

PEAR TREE STREET
GOSWELL ROAD
OLD STREET

This document is split into the following three sections, each focusing on a particular part of the new refurbishment proposals:

1. AN ACTIVE BASE

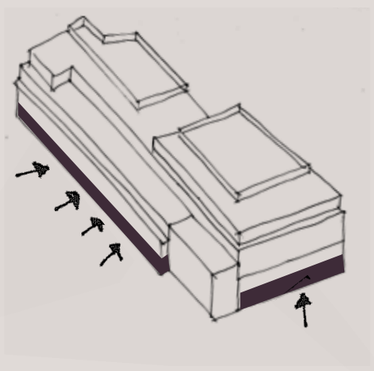

2. THE CORNER

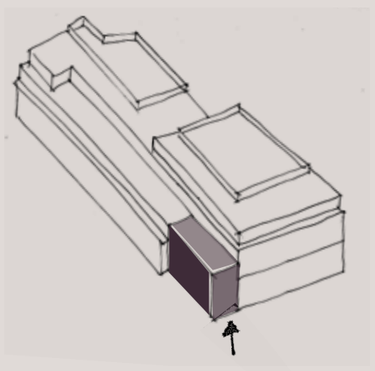

3. WORK SPACE

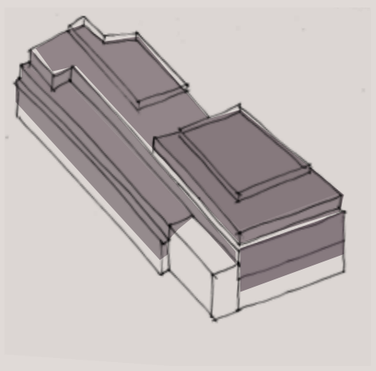

1. AN ACTIVE BASE

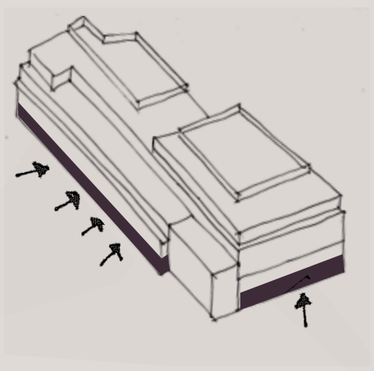

2. THE CORNER

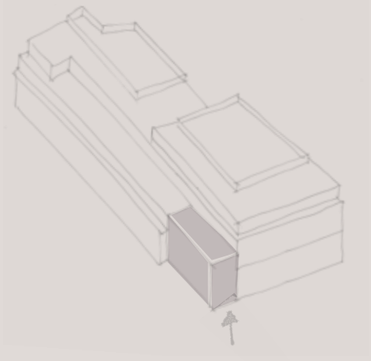

3. WORK SPACE

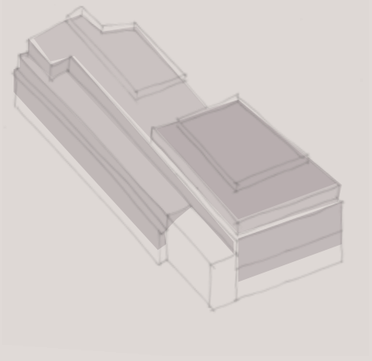

AN ACTIVE BASE

It is proposed that the existing loading bays fronting Pear Tree Street are converted into high quality commercial office space. This space will comprise the ground floor with direct access from Pear Tree Street.

The lower ground floor is to be refurbished to provide workspace amounting to approximately 5,170sqft – divided into 4no. incubator units.

AS PROPOSED | **GROUND FLOOR PLAN**

AS PROPOSED | **LOWER GROUND FLOOR PLAN**

LIGHT AND VOLUME

A 'sunken courtyard' is proposed to be created by removing existing slabs at the rear of the building, where it adjoins the adjacent City University sports hall.

Planting and furniture will be introduced to make this a desirable amenity space with year round access.

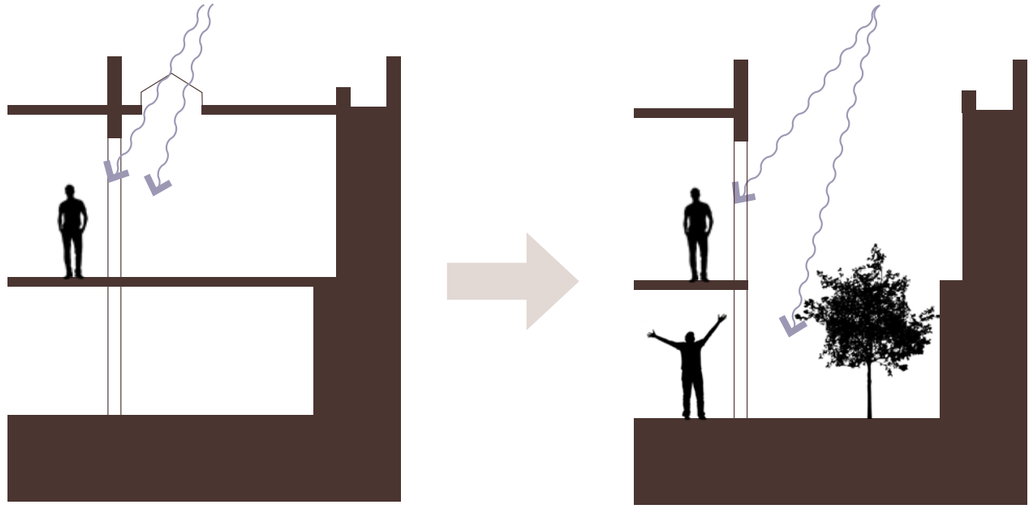

The existing condition

The proposed condition

AN ACTIVE BASE

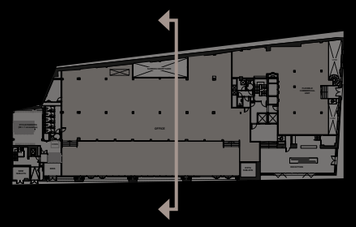

AND ON GOSWELL ROAD...

The lower floors of the Goswell Road block are proposed to be transformed into a flexible A1/B1 unit. Arranged over ground and lower ground floors, a commercial space of approximately 7,200sqft is provided.

It is proposed that the existing building facade is retained and refurbished. It is proposed that the existing ground floor window openings are lowered to street level to provide full-height glazing. This is intended to increase the natural light into the basement and provide active frontages on the streetscape.

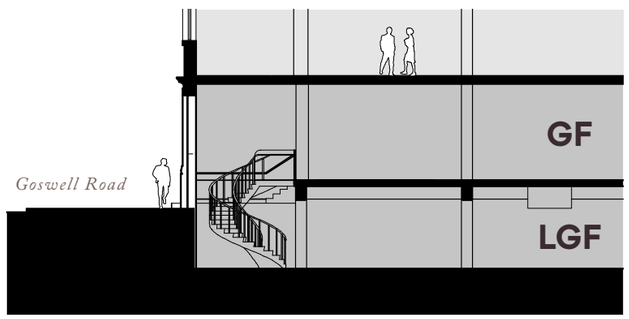
Goswell Road
GF
LGF

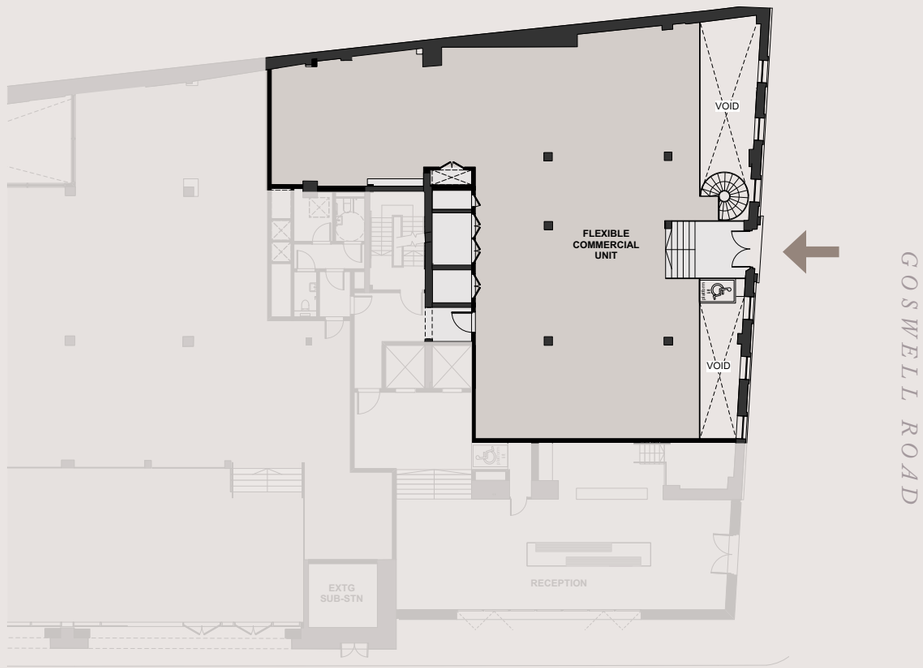

GROUND FLOOR PLAN

LOWER GROUND FLOOR PLAN

1. AN ACTIVE BASE

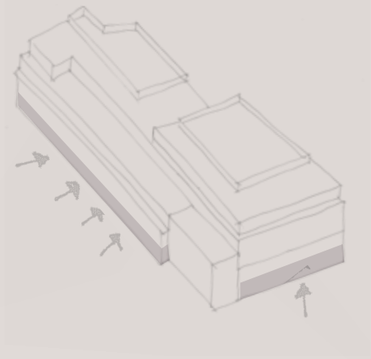

2. THE CORNER

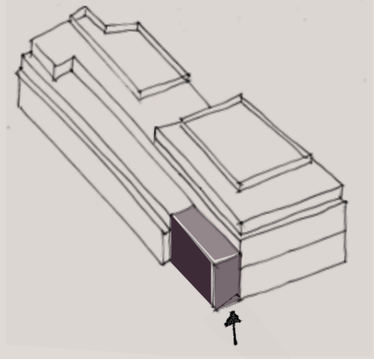

3. WORK SPACE

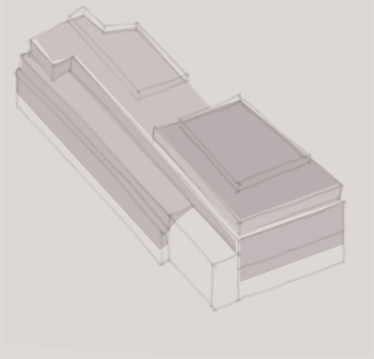

THE CORNER

The land on the junction of Goswell Road and Pear Tree Street provides the opportunity for a standalone intervention which ties the overall development together.

This new corner block will provide a bold front door and reception area at ground floor level, as well as striking office space at 1st and 2nd floor levels.

A NOD TO THE PAST...

The current building on the site was developed in the mid to late 1960's. Prior to this, historical maps show that there was a distillery on the site, with the corner plot occupied by a public house, the White Horse & Cross Keys.

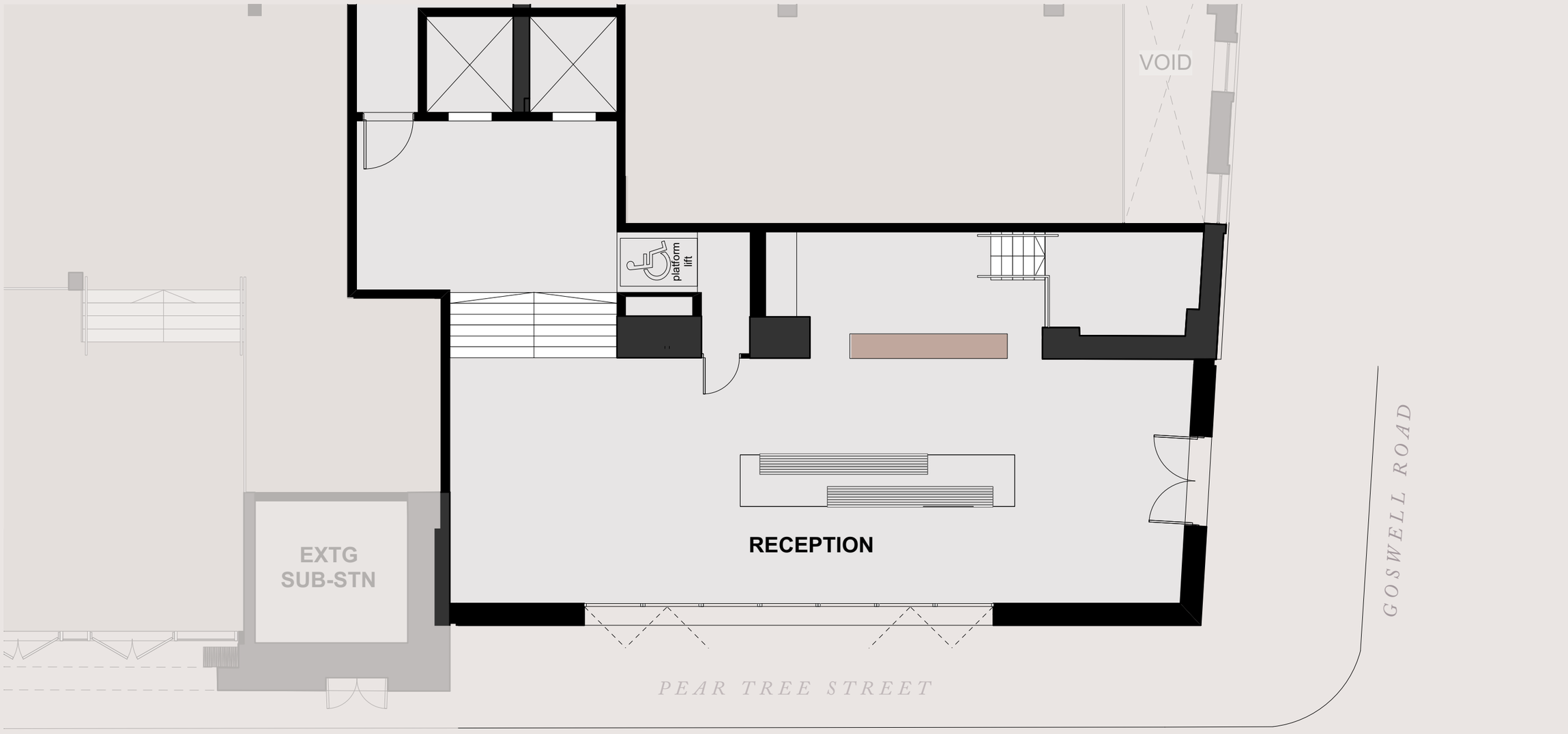

AS PROPOSED | **GROUND FLOOR PLAN**

N

1. AN ACTIVE BASE

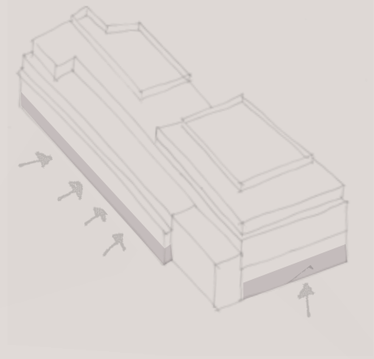

2. THE CORNER

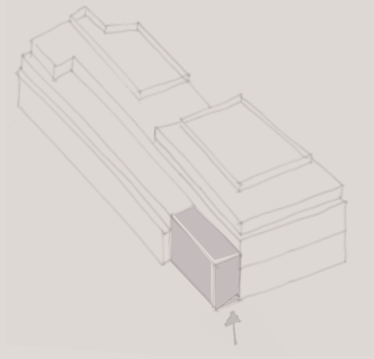

3. **WORK SPACE**

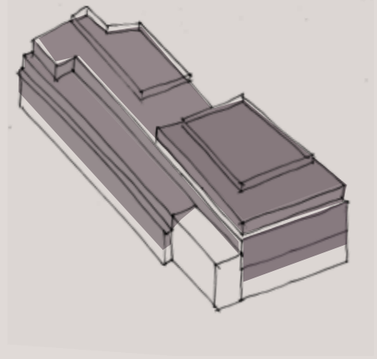

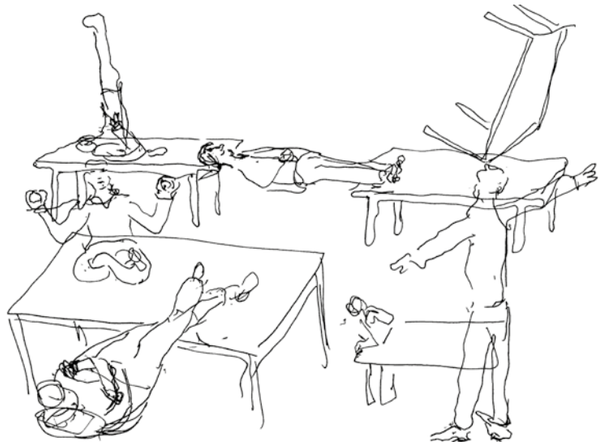

WORK SPACE

The upper floors of the building will comprise of modern office space. Improvements to the core arrangement will create flexible and efficient floor plates, and new M+E will be fitted throughout.

An opportunity exists to provide more space to the top of the building. It is proposed that the blocks on Pear Tree Street and Goswell Road are extended by one additional storey.

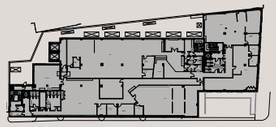

As existing | First floor plan

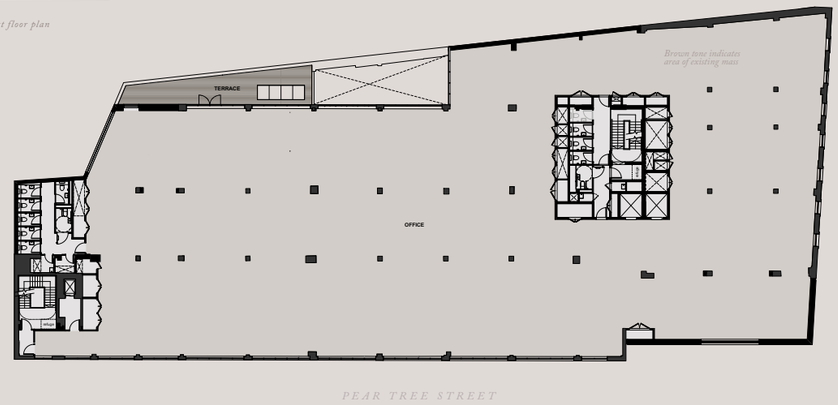

AS PROPOSED | **FIRST FLOOR**

APPROX 1,620 SQM (17,438 SQFT) NIA

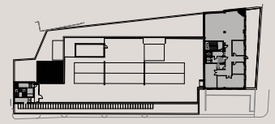

As existing | Third floor plan

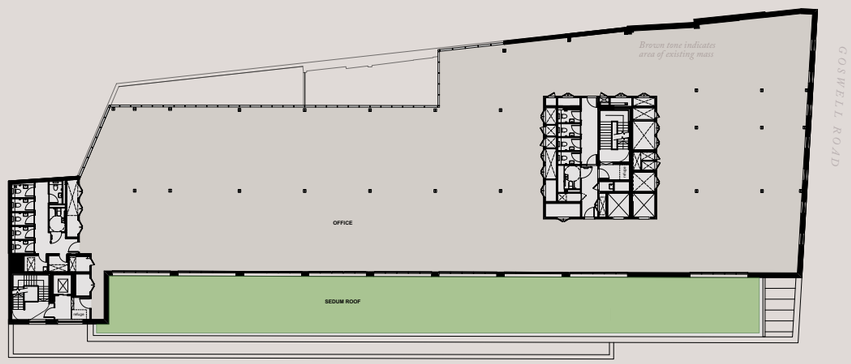

AS PROPOSED | **THIRD FLOOR** (EXTENDED)

APPROX 1,152 SQM (12,400 SQFT) NIA

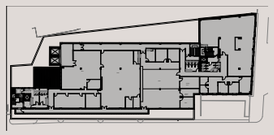

As existing | Second floor plan

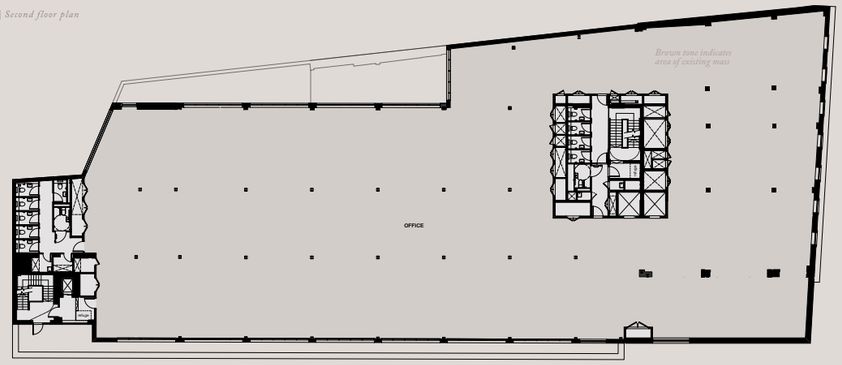

AS PROPOSED | **SECOND FLOOR**

APPROX 1,538 SQM (16,555 SQFT) NIA

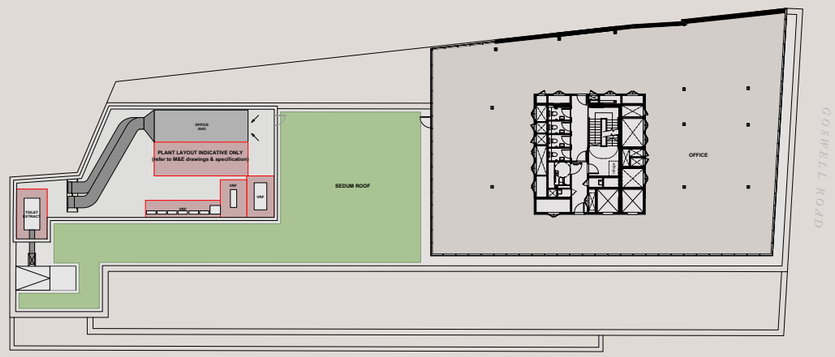

AS PROPOSED | **FOURTH FLOOR** (NEW)

APPROX 576 SQM (6,200 SQFT) NIA

AREAS

EXISTING AREAS

	Existing GEA		Existing GIA				Existing NIA			
	TOTAL		Office		**TOTAL**		Office		**TOTAL**	
LEVEL	sqft	sqm	sqft	sqm	sqft	sqm	sqft	sqm	sqft	sqm
BA - Lower Ground Floor	*15705*	*1459*	*14456*	*1343*	*14456*	*1343*	*12292*	*1142*	*12292*	*1142*
00 - Ground Floor	*20882*	*1940*	*19472*	*1809*	*19472*	*1809*	*10150*	*943*	*10150*	*943*
01 - First Floor	*17524*	*1628*	*16533*	*1536*	*16533*	*1536*	*13832*	*1285*	*13832*	*1285*
02 - Second Floor	*15726*	*1461*	*14757*	*1371*	*14757*	*1371*	*12292*	*1142*	*12292*	*1142*
03 - Third Floor	*3348*	*311*	*3272*	*304*	*3272*	*304*	*2465*	*229*	*2465*	*229*
04 - Fourth Floor	*0*	*0*	*0*	*0*	*0*	*0*	*0*	*0*	*0*	*0*
Total	**73184**	**6799**	**68491**	**6363**	**68491**	**6363**	**51032**	**4741**	**51032**	**4741**

PROPOSED AREAS

	Proposed GEA		Proposed GIA								Proposed NIA							
	TOTAL		Office		Office - Affordable		A1/ B1 unit		**TOTAL**		Office		Office - Affordable		A1/ B1 unit		**TOTAL**	
LEVEL	sqft	sqm	sqft	sqm	sqft	sqm	sqft	sqm	sqft	sqm	sqft	sqm	sqft	sqm	sqft	sqm	sqft	sqm
BA - Lower Ground Floor	*15705*	*1459*	*5683*	*528*	*4994*	*464*	*3778*	*351*	*14456*	*1343*	*0*	*0*	*3477*	*323*	*3670*	*341*	*7147*	*664*
00 - Ground Floor	*21539*	*2001*	*15758*	*1464*	*183*	*17*	*3444*	*320*	*19386*	*1801*	*10818*	*1005*	*560*	*0*	*3154*	*293*	*13972*	*1298*
01 - First Floor	*20828*	*1935*	*19946*	*1853*	*0*	*0*	*0*	*0*	*19946*	*1853*	*17438*	*1620*	*0*	*0*	*0*	*0*	*17438*	*1620*
02 - Second Floor	*19795*	*1839*	*18934*	*1759*	*0*	*0*	*0*	*0*	*18934*	*1759*	*16555*	*1538*	*0*	*0*	*0*	*0*	*16555*	*1538*
03 - Third Floor	*15457*	*1436*	*14671*	*1363*	*0*	*0*	*0*	*0*	*14671*	*1363*	*12400*	*1152*	*0*	*0*	*0*	*0*	*12400*	*1152*
04 - Fourth Floor	*7761*	*721*	*7513*	*698*	*0*	*0*	*0*	*0*	*7513*	*698*	*6200*	*576*	*0*	*0*	*0*	*0*	*6200*	*576*
Total	**101084**	**9391**	**82505**	**7665**	**5177**	**481**	**7223**	**671**	**94905**	**8817**	**63410**	**5891**	**4037**	**323**	**6824**	**634**	**73711**	**6848**

All areas are approximate and indicative for comparison purposes only.

buckleygrayyeoman.com